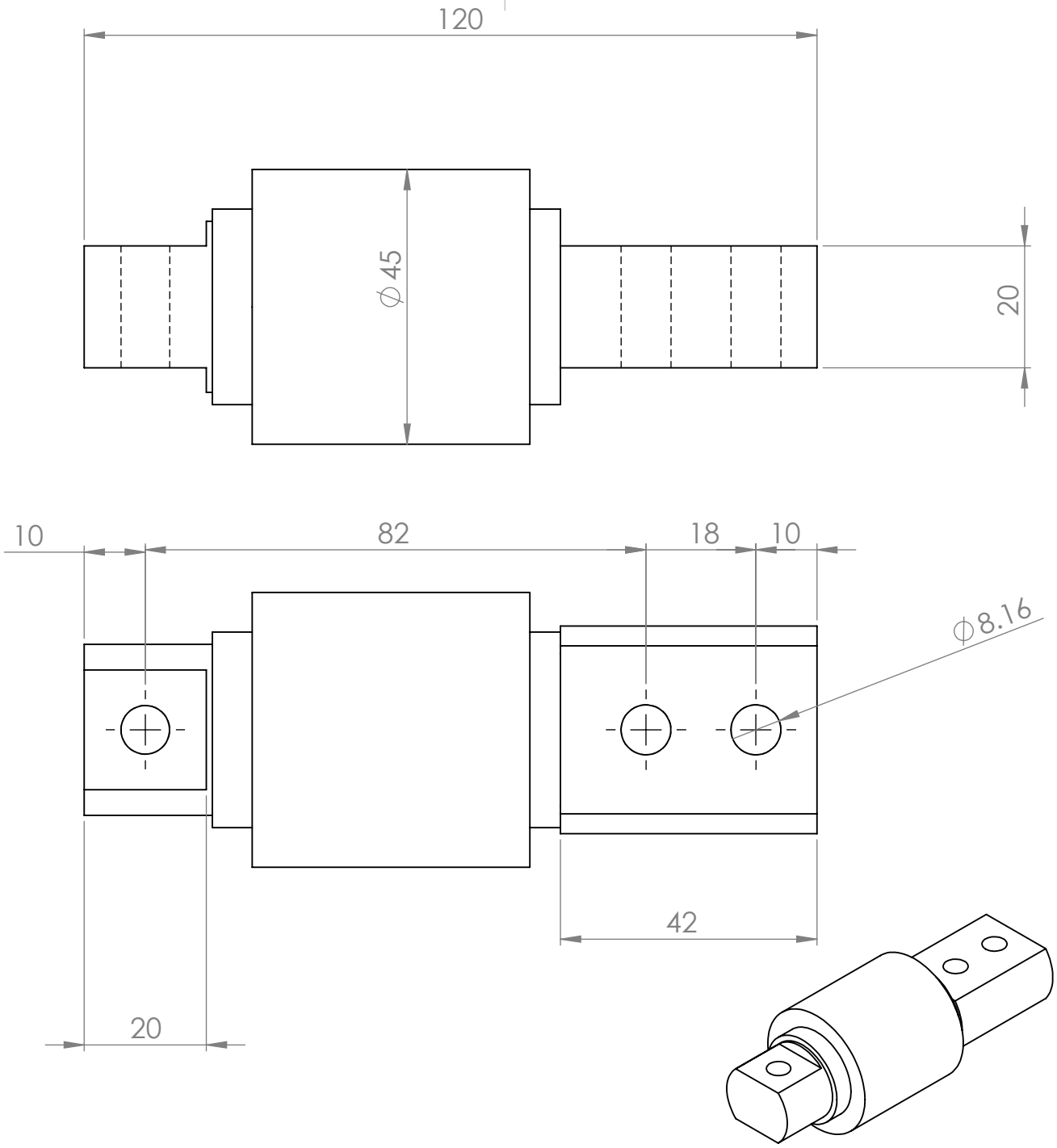

UNLESS OTHERWISE SPECIFIED: DIMENSIONS ARE IN MILLIMETERS SURFACE FINISH: TOLERANCES: LINEAR: ANGULAR:	FINISH:			DEBUR AND BREAK SHARP EDGES	DO NOT SCALE DRAWING	REVISION
					WEIGMA	
	NAME	SIGNATURE	DATE		TITLE: Celula de Carga Fuelle Inox (17938)	
DRAWN						
CHK'D						
APPV'D						
MFG						
Q.A				MATERIAL:	DWG NO. EPEL 20KG	A4
				WEIGHT:	SCALE:1:2	SHEET 1 OF 1